Product Specification Sheet

OLSB45(54)12L-C(I)DH3

RoHS Compliant 1.25G 1490/1550nm(1550/1490nm) 120km Transceiver

Product Features

- ●Supports 1.25Gbps/1.0625Gbps bit rates
- ●Bi-Directional LC connector
- ●Hot pluggable SFP footprint
- ●1490nm DFB laser and 1550nm APD photo detector
- ●1550nm DFB laser and 1490nm APD photo detector
- ●Applicable for 120Km SMF connection
- ●Low power consumption, < 1.2W
- ●Digital Diagnostic Monitor Interface
- ●Compliant with SFP MSA and SFF-8472
- ●Very low EMI and excellent ESD protection
- ●Operating case temperature:
  Commerical:0 to 70 °C
  Industrial:-40 to 85 °C

Applications

- ●Gigabit Ethernet
- ●Fiber Channel
- ●Switch to Switch interface
- ●Switched backplane applications
- ●Router/Server interface
- ●Other Optical Links

Product Descriptions

Olinkphotonics' OLSB45(54)12L-CDH3, SFP-BIDI transceivers are high performance, cost effective modules supporting dual data-rate of 1.25Gbps/1.0625Gbps and 120km transmission distance with SMF.The transceiver consists of three sections: a DFB laser transmitter, a APD photodiode integrated with a trans-impedance preamplifier (TIA) and MCU control unit. All modules satisfy class I laser safety requirements. The transceivers are compatible with SFP Multi-Source Agreement (MSA) and SFF-8472. For further information, please refer to SFP MSA.

Functional Diagram

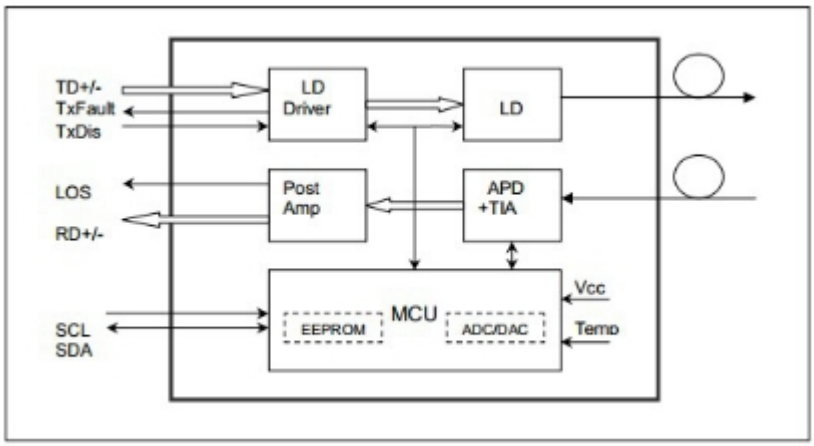

Absolute Maximum Ratings

Parameter	Symbol	Min.	Max.	Unit	Note
Supply Voltage	Vcc	-0.5	4.0	V	
Storage Temperature	Ts	-40	85	°C	
Relative Humidity	RH	0	85	%	

Note: Stress in excess of the maximum absolute ratings can cause permanent damage to the transceiver.

General Operating Characteristics

Parameter	Symbol	Min.	Typ	Max.	Unit	Note
Data Rate	DR		1.25		Gb/s	
Supply Voltage	Vcc	3.13	3.3	3.47	V	
Supply Current	Icc_s			350	mA	
Operating Case Temp.	Tc	0		70	°C	
	TI	-40		85		

Electrical Characteristics ($T_{OP(C)}$ = 0 to 70 ℃, $T_{OP(I)}$ =-40 to 85 ℃, V_{CC} = 3.13 to 3.47 V)

Parameter	Symbol	Min.	Typ	Max.	Unit	Note
Transmitter						
Differential data input swing	$V_{IN,PP}$	120		820	mVpp	1
Tx Disable Input-High	V_{IH}	2.0		Vcc+0.3	V	
Tx Disable Input-Low	V_{IL}	0		0.8	V	
Tx Fault Output-High	V_{OH}	2.0		Vcc+0.3	V	2
Tx Fault Output-Low	V_{OL}	0		0.8	V	2
Input differential impedance	R_{in}		100		Ω	
Receiver						
Differential data output swing	$V_{out,pp}$	340	650	800	mV_{pp}	3
Rx LOS Output-High	V_{ROH}	2.0		Vcc+0.3	V	2
Rx LOS Output-Low	V_{ROL}	0		0.8	V	2

Notes:

1. TD+/- are internally AC coupled with 100Ω differential termination inside the module.
2. Tx Fault and Rx LOS are open collector outputs, which should be pulled up with 4.7k to 10kΩ resistors on the host board. Pull up voltage between 2.0V and Vcc+0.3V.
3. RD+/- outputs are internally AC coupled, and should be terminated with 100Ω (differential) at the user SERDES.

Olinkphotinics'Proprietary and Confidential, Do not Copy or Distribute without noticed

Optical Characteristics ($T_{OP(C)}$ = 0 to 70 ℃, $T_{OP(I)}$ =-40 to 85 ℃, V_{CC} = 3.13 to 3.47 V)

Parameter	Symbol	Min.	Typ	Max.	Unit	Note
Transmitter						
Operating Wavelength	λ	1470	1490	1510	nm	
		1530	1550	1570		
Ave. output power (Enabled)	P_{AVE}	0		5	dBm	1
Extinction Ratio	ER	9			dB	1
Side-Mode Suppression Ratio	SMSR	30			dB	
RMS spectral width	Δλ			1	nm	
Rise/Fall time (20%~80%)	Tr/Tf			0.26	ns	2
Dispersion penalty	T_{DP}			3.9	dB	
Output Optical Eye	Compliant with IEEE802.3 z (class 1 aser safety)					
Receiver						
Operating Wavelength	λ		1550		nm	
			1490			
Receiver Sensitivity	P_{SEN1}			-32	dBm	3
Overload	P_{AVE}	-7			dBm	3
LOS Assert	Pa	-45			dBm	
LOS De-assert	Pd			-33	dBm	
LOS Hysteresis	Pd-Pa	0.5			dB	

Notes:

1.Measured at 1.25Gb/s with PRBS2^{23-1}NRZ test pattern.

2.Unfiltered, measured with a PRBS2^{23-1} test pattern @1.25Gbps

3.Measured at 1.25Gb/s with PRBS 2^{23-1} NRZ test pattern for BER < $1x10^{-12}$

Pin Defintion And Functions

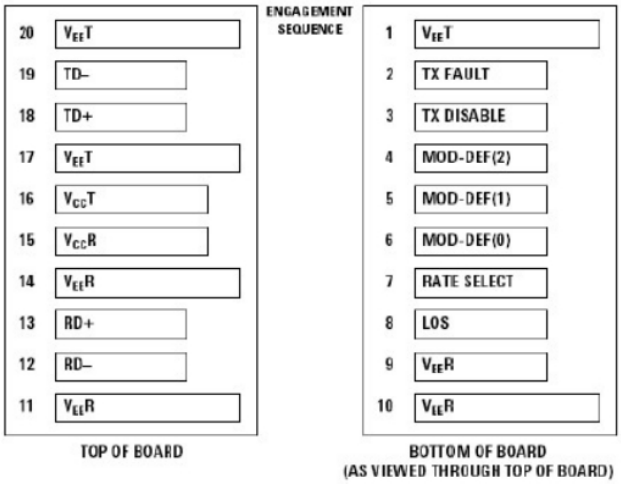

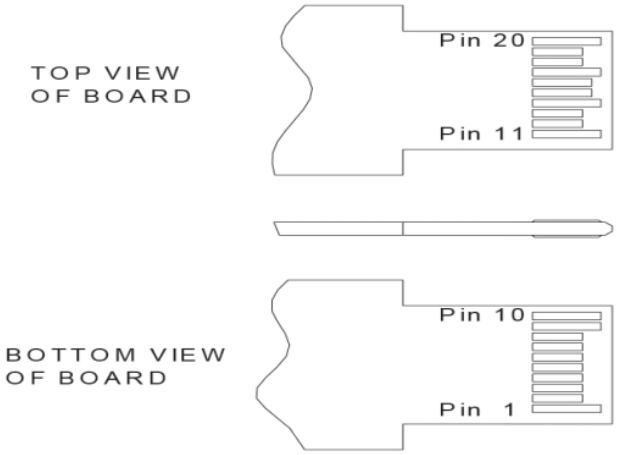

Pin	Symbol	Name/Description	Notes
1	VeeT	Tx ground	
2	Tx Fault	Tx fault indication, Open Collector Output, active "H"	1
3	Tx Disable	LVTTL Input, internal pull-up, Tx disabled on "H"	2
4	MOD-DEF2	2 wire serial interface data input/output (SDA)	3
5	MOD-DEF1	2 wire serial interface clock input (SCL)	3
6	MOD-DEF0	Model present indication	3
7	Rate select	No connection	
8	LOS	Rx loss of signal, Open Collector Output, active "H"	4
9	VeeR	Rx ground	
10	VeeR	Rx ground	
11	VeeR	Rx ground	
12	RD-	Inverse received data out	5
13	RD+	Received data out	5
14	VeeR	Rx ground	
15	VccR	Rx power supply	
16	VccT	Tx power supply	
17	VeeT	Tx ground	
18	TD+	Transmit data in	6
19	TD-	Inverse transmit data in	6
20	VeeT	Tx ground	

Notes:

1.When high, this output indicates a laser fault of some kind. Low indicates normal operation. And should be pulled up with a 4.7 – 10KΩ resistor on the host board.

2. TX disable is an input that is used to shut down the transmitter optical output. It is pulled up within the module with a 4.7 – 10KΩ resistor. Its states are:

Low (0 – 0.8V): Transmitter on (>0.8, < 2.0V): Undefined

High (2.0V~Vcc+0.3V): Transmitter Disabled Open: Transmitter Disabled

3.Mod-Def 0,1,2. These are the module definition pins. They should be pulled up with a 4.7K – 10KΩ resistor on the host board. The pull-up voltage shall be between 2.0V~Vcc+0.3V.

Mod-Def 0 has been grounded by the module to indicate that the module is present

Mod-Def 1 is the clock line of two wire serial interface for serial ID

Mod-Def 2 is the data line of two wire serial interface for serial ID

4.When high, this output indicates loss of signal (LOS). Low indicates normal operation.

5.RD+/-: These are the differential receiver outputs. They are AC coupled 100Ω differential lines which should be terminated with 100Ω (differential) at the user SERDES. The AC coupling is done inside the module and is thus not required on the host board.

6. TD+/-: These are the differential transmitter inputs. They are AC-coupled, differential lines with 100Ω differential termination inside the module. The AC coupling is done inside the module and is thus not required on the host board.

Olinkphotinics'Proprietary and Confidential, Do not Copy or Distribute without noticed

Digital Diagnostic Specifications

The OLSB45(54)12L-C(I)DH3 transceivers can be used in host systems that require either internally or externally calibrated digital diagnostics.

Parameter	Symbol	Units	Min.	Max.	Accuracy	Note
Transceiver temperature	D_{Temp-E}	ºC	-45	+90	±5ºC	1
Transceiver supply voltage	$D_{Voltage}$	V	2.8	4.0	±3%	
Transmitter bias current	D_{Bias}	mA	2	80	±10%	2
Transmitter output power	$D_{Tx-Power}$	dBm	-1	+6	±3dB	
Receiver average input power	$D_{Rx-Power}$	dBm	-33	-8	±3dB	

Notes:
1.When Operating temp.=0~70 ºC,the range will be min=-5,Max=+75
2. The accuracy of the Tx bias current is 10% of the actual current from the laser driver to the laser
3. Internal/ External Calibration compatible.

Typical Interface Circuit

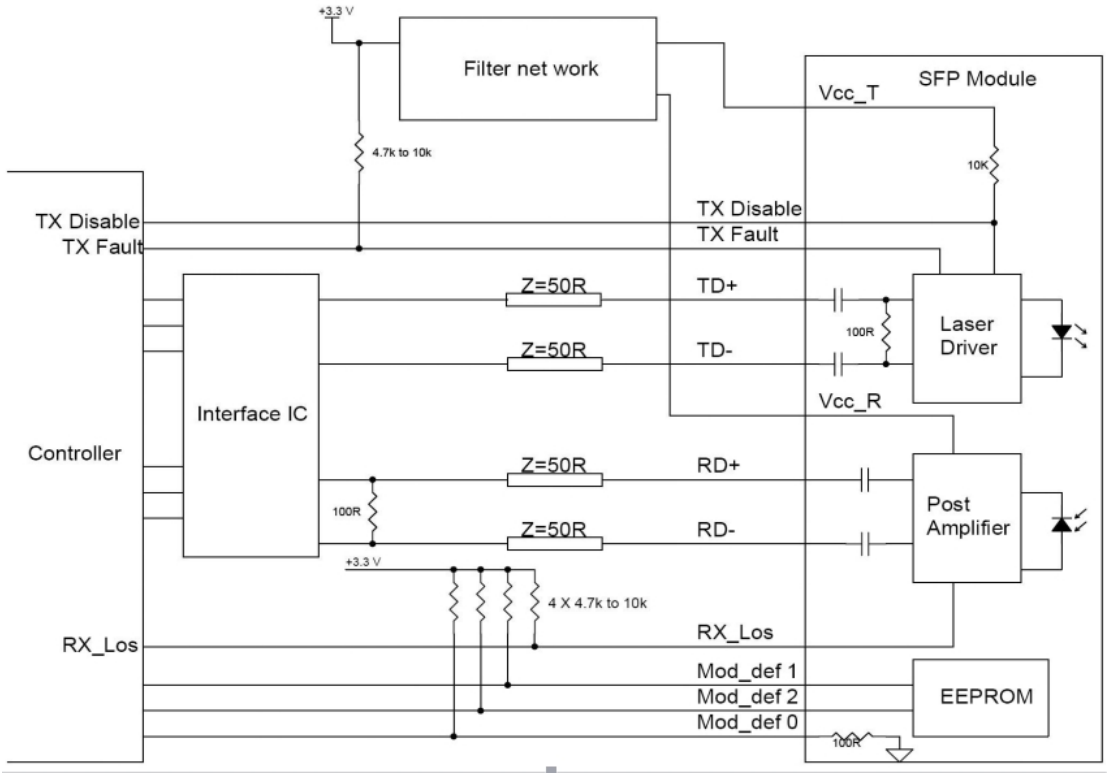

Package Dimensions

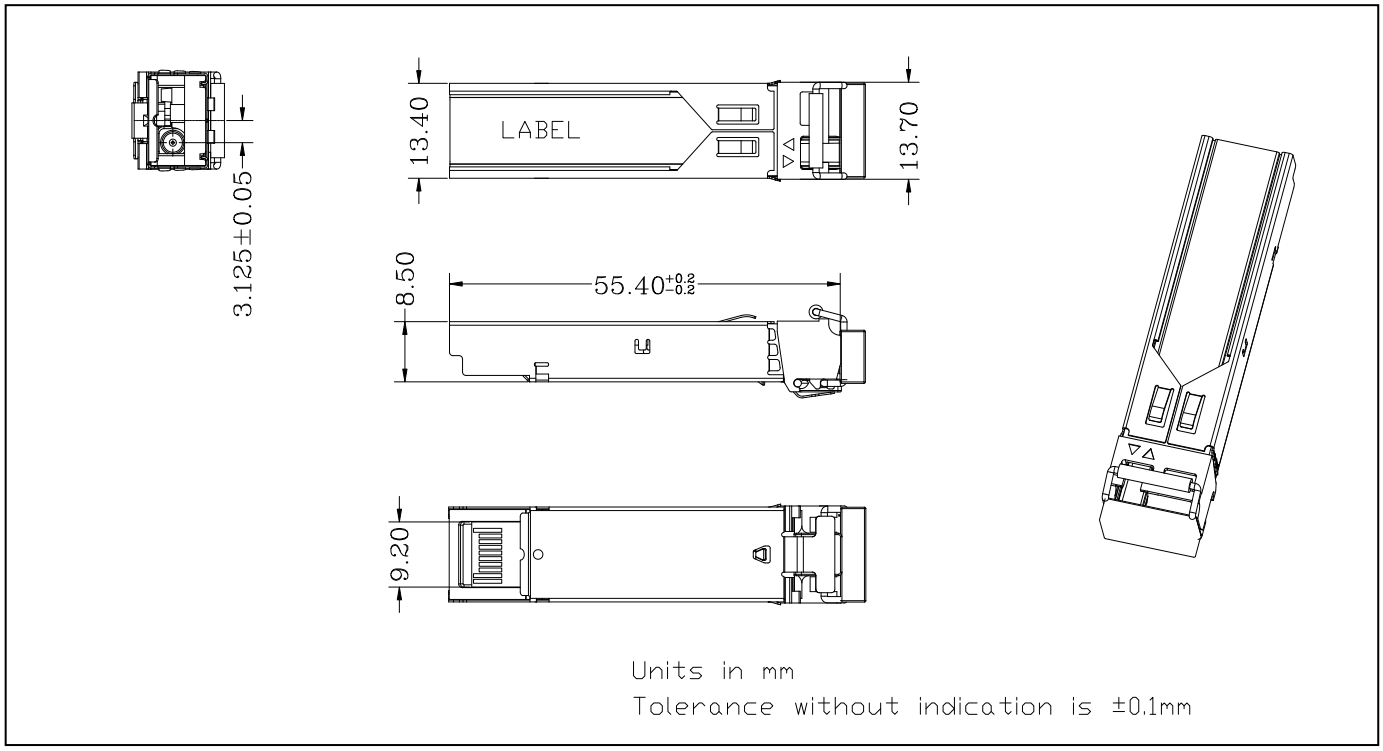

Wavelength	Latch Color
TX 1490nm	Violet
TX 1550nm	Yellow

Ordering Information

Part Number	Description
OLSB4512L-CDH3	SFP BIDI,1.25G ,1490/1550nm ,120Km,0~70℃, with Digital Diagnostic Monitor
OLSB5412L-CDH3	SFP BIDI,1.25G ,1550/1490nm ,120Km,0~70℃, with Digital Diagnostic Monitor
OLSB4512L- IDH3	SFP BIDI,1.25G ,1490/1550nm ,120Km,-40~85℃, with Digital Diagnostic Monitor
OLSB5412L-IDH3	SFP BIDI,1.25G ,1550/1490nm ,120Km,-40~85℃, with Digital Diagnostic Monitor

For More Information

Shenzhen Olinkcom Technology Co.,Ltd

Add:4/F, No.2 Building, Delux Science and Technology City, No.5 Guanle Rd,Luhu Community, Guanlan Street, Longhua District, Shenzhen, China
Tel: +86-755-27215326
Fax: +86-755-27217051
E-mail:sales@olinkphotonics.com
Website:www.olinkphotonics.com

Olinkphotinics'Proprietary and Confidential, Do not Copy or Distribute without noticed